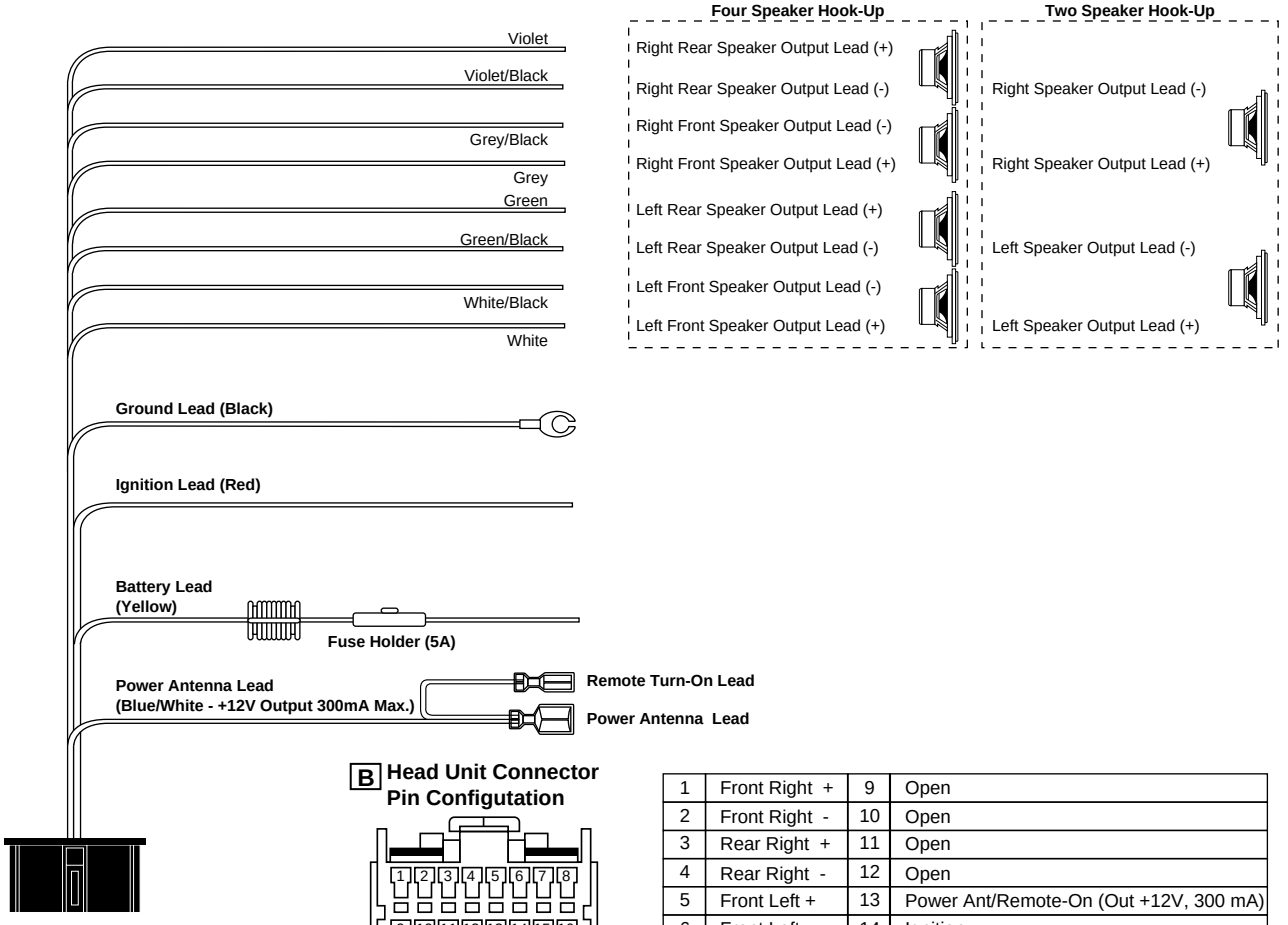

B Head Unit Connector Pin Configutation

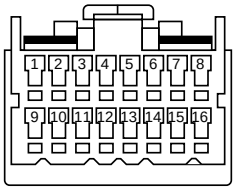

1	Front Right +	9	Open
2	Front Right -	10	Open
3	Rear Right +	11	Open
4	Rear Right -	12	Open
5	Front Left +	13	Power Ant/Remote-On (Out +12V, 300 mA)
6	Front Left -	14	Ignition
7	Rear Left +	15	Battery
8	Rear Left -	16	Ground

B Connector Assembly
Part No. - 01T25808W04

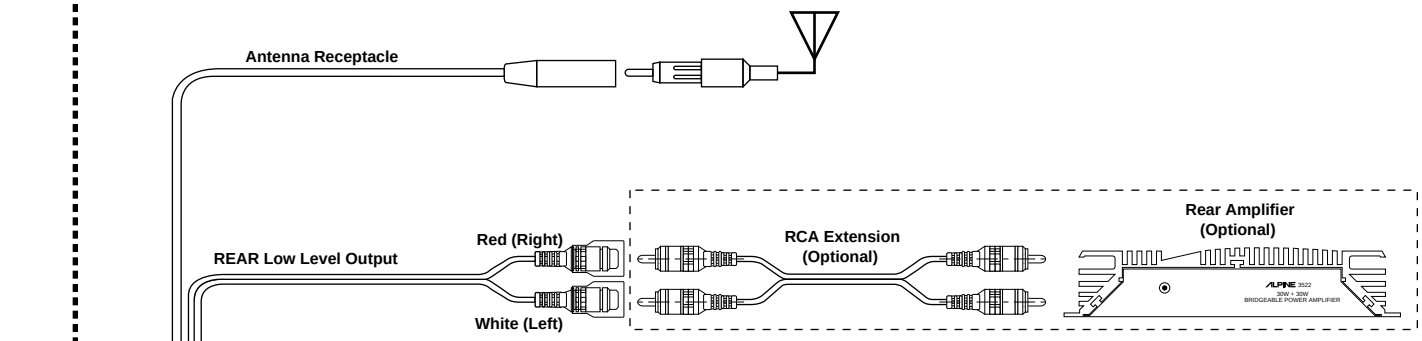

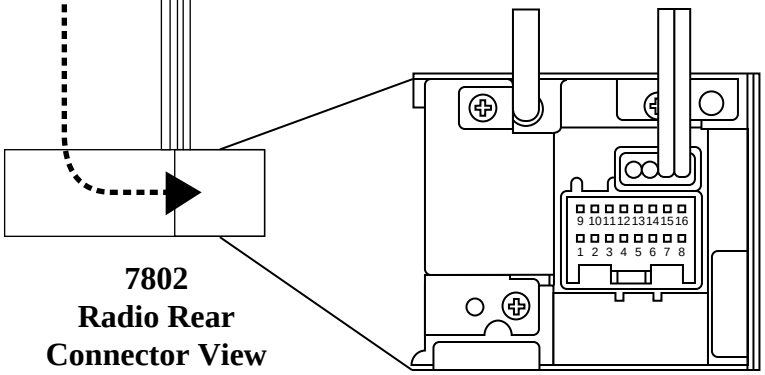

7802
Radio Rear
Connector View

1. Front Right +
2. Front Right -
3. Rear Right +
4. Rear Right -
5. Front Left +
6. Front Left -
7. Rear Left +
8. Raer Left -
9. Open
10. Open
11. Open
12. Open
13. Power Ant./Remote-On
14. ACC- Ignition
15. Battery
16. Ground