# WIRING DIAGRAMS
## Fig. 8: Instr. Cluster (Partial), Oil Pres Control Unit (Grid 28-31)
1992 Audi 80
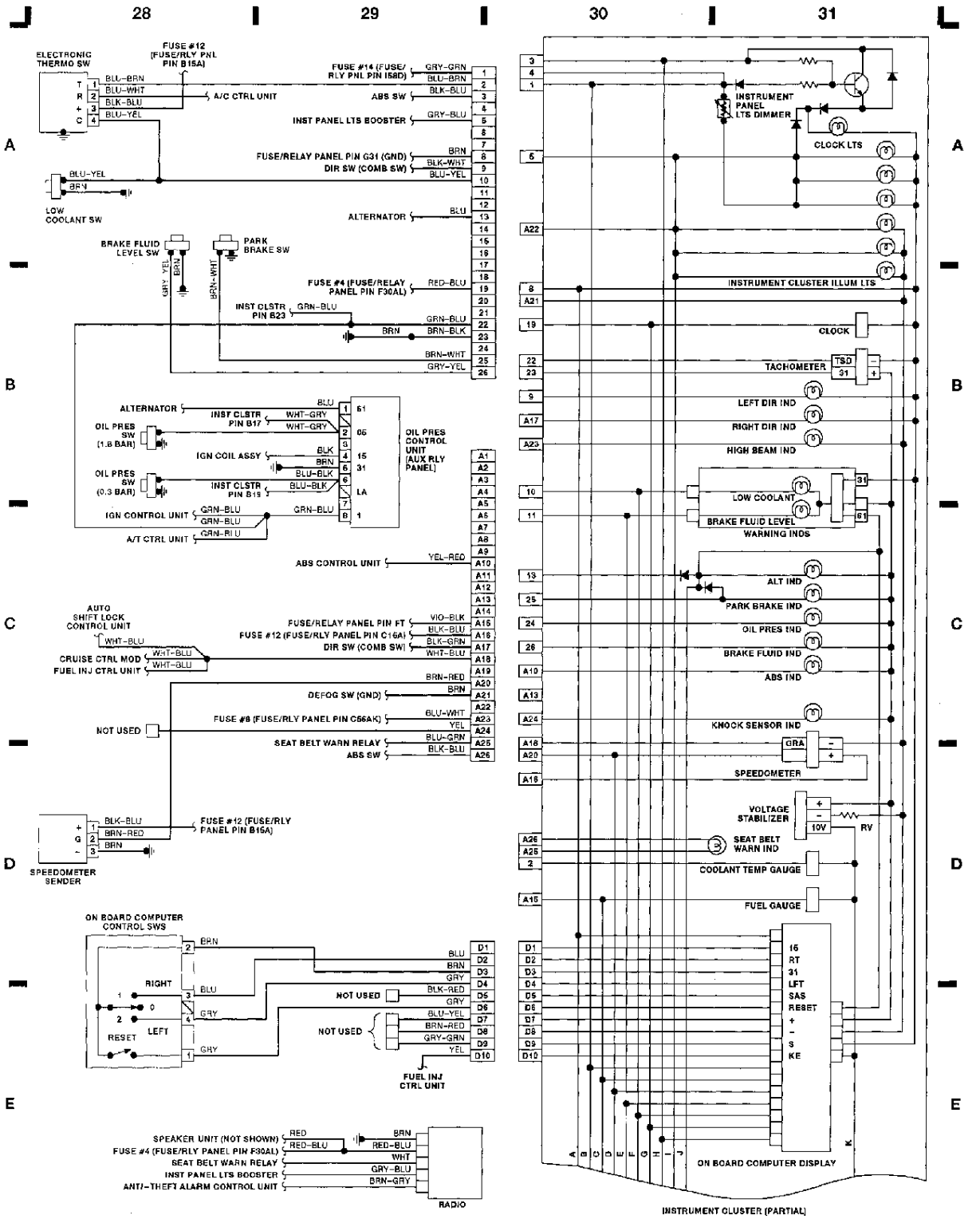
Copyright © 1998 Mitchell Repair Information Company, LLC
Monday, April 10, 2006 11:19AM